DIMENSIONAL CHARACTERISTICS -

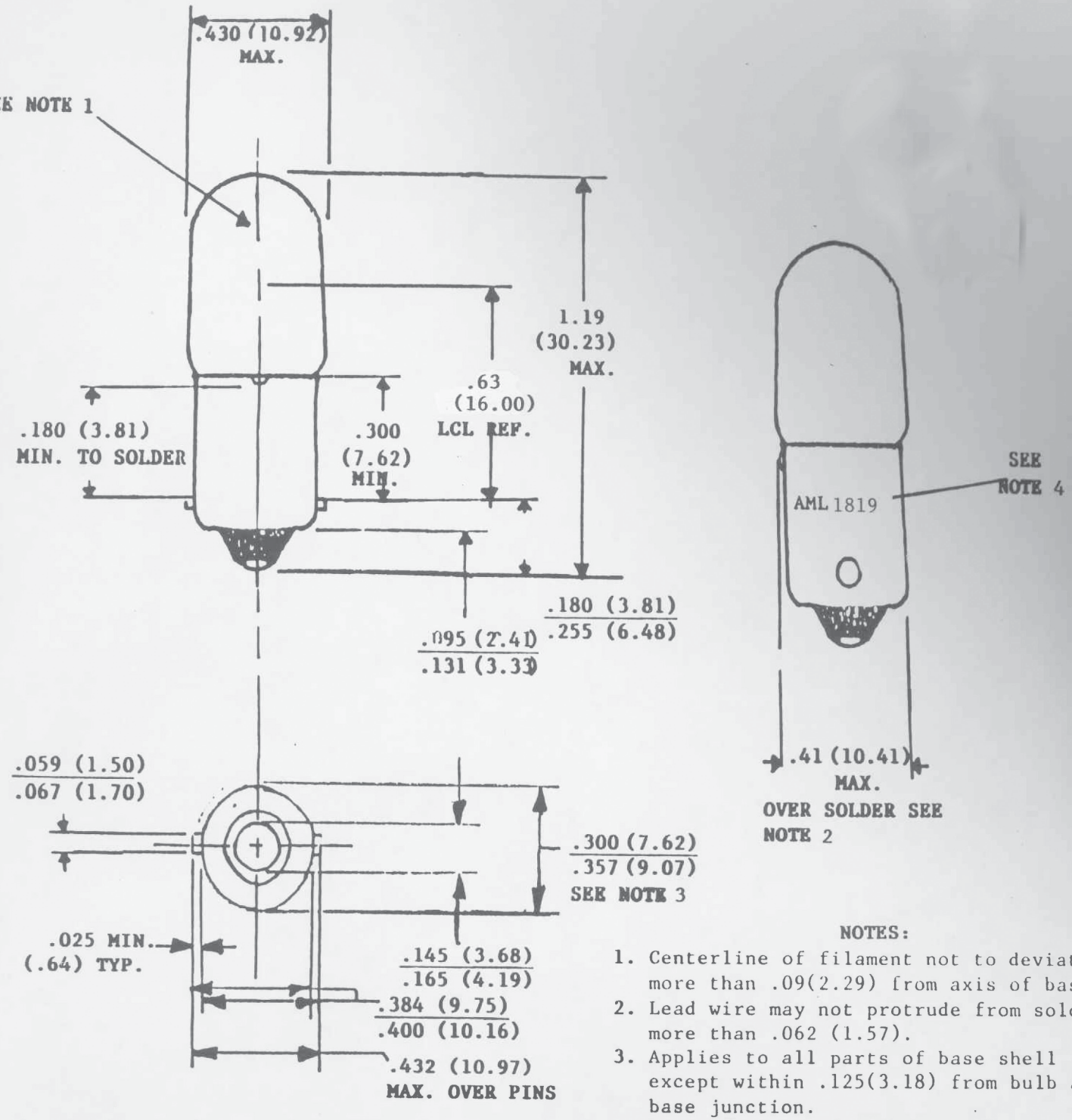

NOTES:

1. Centerline of filament not to deviate more than .09(2.29) from axis of base.
2. Lead wire may not protrude from solder more than .062 (1.57).
3. Applies to all parts of base shell except within .125(3.18) from bulb and base junction.
4. Parts to be marked in this area with AML and trade number. Metal indentation preferred.